PH Reinforcement Continuity System

For the screw connections of concrete elements

PFEIFER

Highest dynamic resistances for wind towers, high-speed railways and machinery foundations

Your advantages during the planning phase

- Highest fatigue strength up to $\Delta\sigma_{RSK}$ = 125 N/mm²
- Regulated by approvals
- Bar diameter from 12 to 32 mm

Seismic applications

Your advantages during the planning phase

- Usability in seismic areas approved by certificate according to ISO 15835 for seismic loads of the MPA BAU (Technical University of Munich TUM)
- Variable usage of the corresponding national approved reinforcement bars
- Bar diameter from 8 to 28 mm

Versions
PH Reinforcement Continuity System

S. 3

PH-MU female bar

S. 5

PH-MUR reducing female bar

ETA
ETA-20/0259

S. 7

PH-A male bar

S. 4

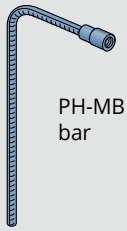

PH-MB bent female bar

S. 5

PH-DM double female bar

S. 5

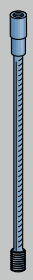

PH-AM male bar with socket

S. 8

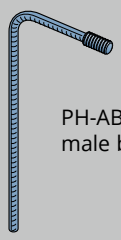

PH-AB bent male bar

S. 4

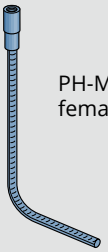

PH-MW hooked female bar

S. 6

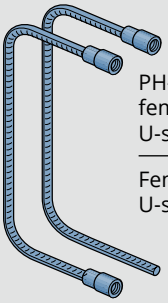

PH-DU double female bar as U-shaped stirrup

Female bar as U-shaped stirrup

S. 6

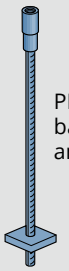

PH-AP female bar with welded anchor plate

S. 8

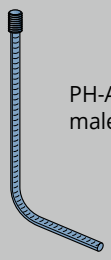

PH-AW hooked male bar

S. 10

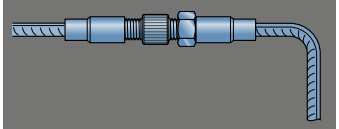

PH-RL right-left-thread connecting bolt

S. 11

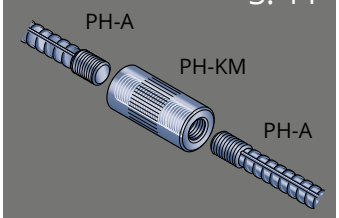

Coupling socket

S. 11

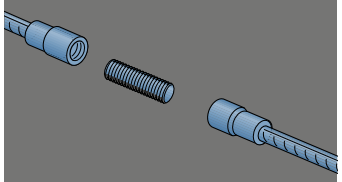

PH-K threaded connection bolt

S. 12

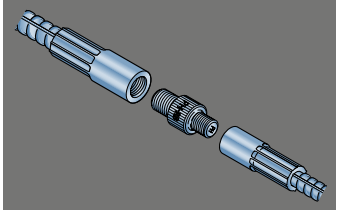

PH-RB reducing bolt

S. 12

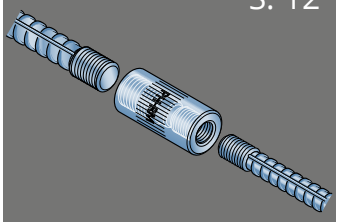

PH-RM reducing socket

S. 13

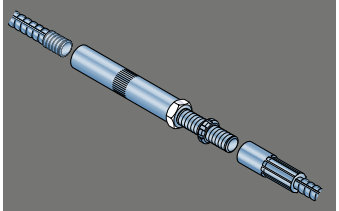

Positioning connector PH-PA

S. 14

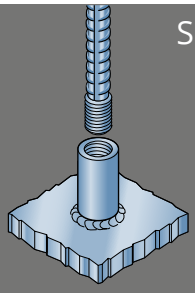

PH-AH welding socket

S. 15

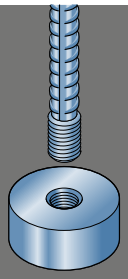

PH-EP end anchorage plate

Load capacity PH system

System size/ Bar diameter	Decisive tension cross section [1]	Steel load capacity
d_s [mm]	A_s [mm²]	N_{Rd} [kN]
8	50	21,9
10	78	34,1
12	113	49,2
14	154	66,9
16	201	87,4
20	314	136,6
25	491	213,4
28	616	267,7
32	804	349,7
40	1257	546,3

[1] Decisive cross section of the reinforcement bar

Fatigue strength and seismic resistance capacities

Combination of products[1]	Fatigue strength	Seismic resistance capacities
	$\Delta\sigma_{RSK}$ [N/mm²]	Categories
PH-MU | PH-A	70	–
PH-MU | PH-K | PH-MU	70	S1 (moderate) and S2 (high)
PH-A | PH-KM | PH-A	125	–
PH-MU | PH-RL | PH-MU	70	–
PH-MU | PH-PA | PH-A	70	–
PH-MU | PH-EP	70	–
PH-MU | screw | PH-EP	70	–

You can find further information in the approvals or certificates available at:
www.pfeifer.info/ph-reinforcement

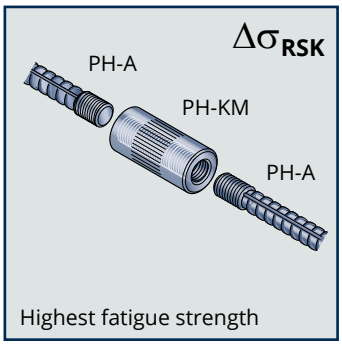

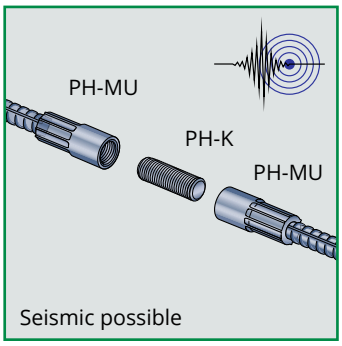

Straight female bar

General building regulations approval DIBT

PFEIFER

Reinforcing

PH reinforcement connection

The PFEIFER female bars are intended for permanent reinforcement connections and continuations.
The female bar can simply be nailed to the formwork with the aid of the nail disc which is included in the shipment.

Two female bars combined with a threaded connection bolt can transmit seismic stresses resulting from earthquakes.

Materials:

Bar: Reinforcing steel bar B500 B

Socket: Precision steel pipe E355

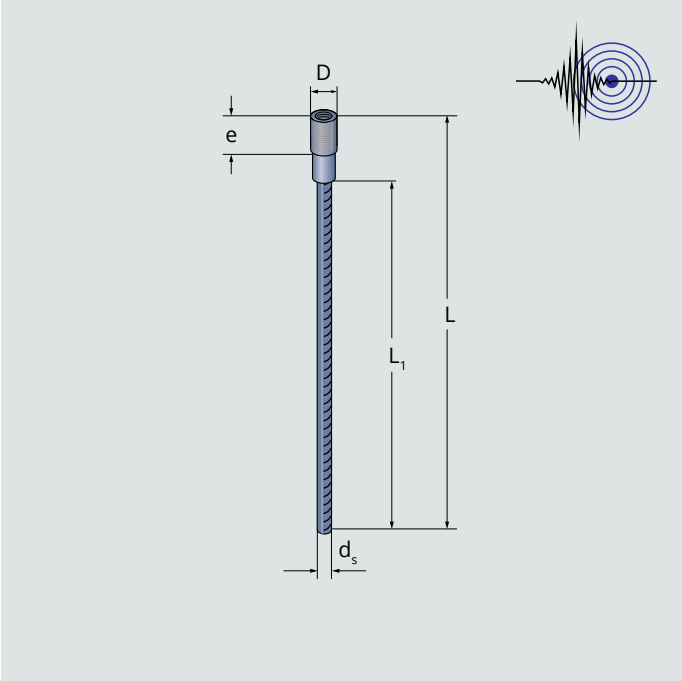

Notice:

All length specifications with a tolerance of ± 10 mm.

Ref. no.	Type	d_s [mm]	Thread size	L [cm]	L_1 [cm]	e [mm]	A_s [mm²]	N_{Rd} [kN]	Weight [kg/pce.]
135178/119055	PH-MU-8	8	M 12	35/55	31/51	15	50	21,9	0,16/0,24
135179/135181	PH-MU-10	10	M 14	40/69	35,5/64,5	17	78	34,1	0,29/0,46
119057/119058/119059	PH-MU-12	12	M 16	57/80/150	52/75/145	20	113	49,2	0,57/0,78/1,40
119062/119063/119064	PH-MU-14	14	M 18	66/93/150	60,2/87,2/144,2	22	154	66,9	0,90/1,22/1,91
119067/119069/119070	PH-MU-16	16	M 20	102/144/200	95,5/137,5/193,5	24	201	87,4	1,75/2,42/3,30
119073/119075/119076	PH-MU-20	20	M 24	128/180/300	119,5/171,5/291,5	32	314	136,6	3,45/4,73/7,69
119081/119082/119083	PH-MU-25	25	M 30	160/226/360	149,7/215,7/349	40	491	213,4	6,70/9,24/14,50
119088/119089/119090	PH-MU-28	28	M 36	179/253/360	166,6/240,6/347,6	42	616	267,7	9,47/13,05/18,22
135176/135363	PH-MU-32	32	M 42	200/290	186,3/276,3	52	804	349,7	13,55/19,23
149175/149176	PH-MU-40	40	M 52	220/350	203/333	70	1257	546,3	36,10

Notice:

- Special lengths [min L = 2 x (L–L1)] as well as short lengths for welding are available.
- Standard delivery without corrosion protection.
- Delivery of the female bars including PH nail disc (p. 16) for formwork fixing.
- Seismic stresses for connection combination: PH-MU + PH-K + PH-MU.

Bent female bar

General building regulations approval DIBT

PFEIFER

Reinforcing

PH reinforcement connection

The PFEIFER female bars are intended for permanent reinforcement connections and continuations.
The standard-compliant force transmission from the vertical to the horizontal and vice versa can be realised with the bent variants. For example with a reinforcement layout from the foundation into the column.

Materials:

Bar: Reinforcing steel bar B500 B

Socket: Precision steel pipe E355

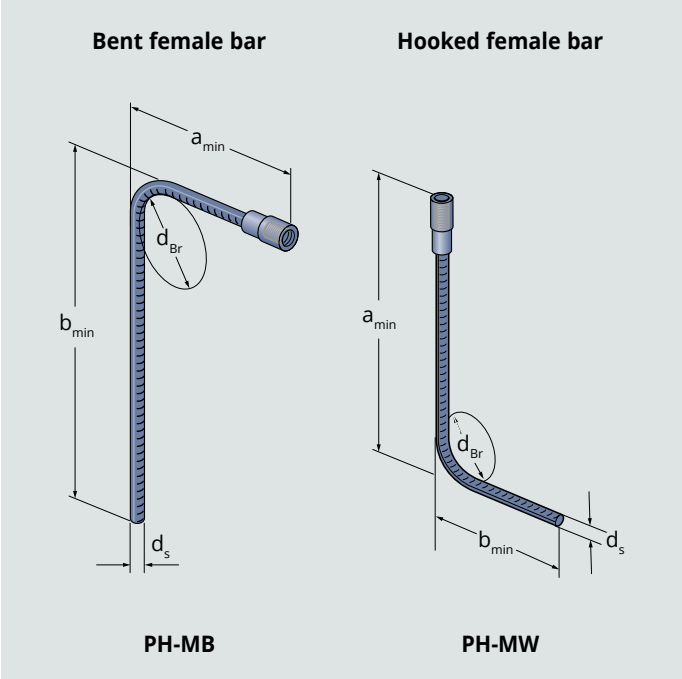

Notice:

All length specifications with a tolerance of ± 10 mm.

PH-MB bent female bar, bending roller diameter

$d_{Br} = 10\ \varnothing_s$
Deviations:
according to EN 1992-1-1

L = a + b – x (stretched length)
b = L – a + x
a = L – b + x
(Legs a and b freely selectable, but not smaller than a_{min} or b_{min} respectively)

PH-MW hooked female bar, bending roller diameter

$d_{Br} = 4\ \varnothing_s$ at $\varnothing_s < 20$ mm
$d_{Br} = 7\ \varnothing_s$ at $\varnothing_s \geq 20$ mm
b_{min} according to EN 1992-1-1

L = a + b – x (stretched length)
b = L – a + x
a = L – b + x
(Legs a and b freely selectable, but not smaller than a_{min} or b_{min} respectively)

Ref. no.	Type	d_s [mm]	Thread size	d_{Br} [mm]	a_{min} [mm]	b_{min} [mm]	Bending coefficient x [mm]
020038	PH-MB-8	8	M 12	80	120	120	28
020039	PH-MB-10	10	M 14	100	136	120	36
020040	PH-MB-12	12	M 16	120	150	130	38
020041	PH-MB-14	14	M 18	140	170	130	46
020042	PH-MB-16	16	M 20	160	200	150	55
020043	PH-MB-20	20	M 24	200	250	220	67
020044	PH-MB-25	25	M 30	250	300	260	82
020045	PH-MB-28	28	M 36	280	340	250	92
020046	PH-MB-32	32	M 42	320	475	550	103
020047	PH-MB-40	40	M 52	400	555	600	135
020048	PH-MW-8	8	M 12	32	85	85	20
020049	PH-MW-10	10	M 14	40	85	85	23
020050	PH-MW-12	12	M 16	48	120	110	25
020051	PH-MW-14	14	M 18	56	125	130	30
020052	PH-MW-16	16	M 20	64	140	140	32
020053	PH-MW-20	20	M 24	140	210	190	54
020054	PH-MW-25	25	M 30	175	260	210	66
020055	PH-MW-28	28	M 36	200	280	220	77
020056	PH-MW-32	32	M 42	220	355	500	86
020057	PH-MW-40	40	M 52	300	380	500	113

Custom female bar variants

General building regulations approval DIBT

PFEIFER

Reinforcing

PH reinforcement connection

The PFEIFER female bars are intended for permanent reinforcement connections and continuations.

Individual installation situations can be realised with the customized versions.

Materials:

Bar: Reinforcing steel bar B500 B

Socket: Precision steel pipe E355

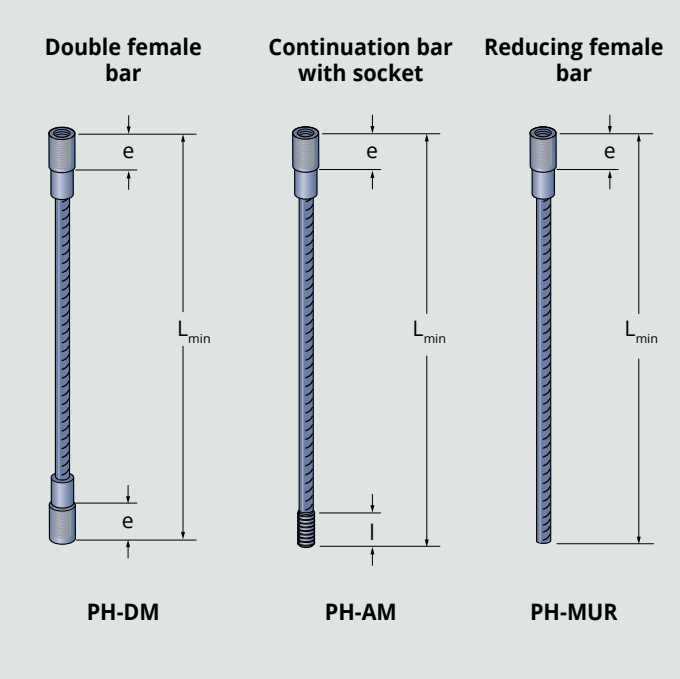

Notice:

All length specifications with a tolerance of ± 10 mm.

Notice:

With precisely fitting lengths, please take into account fastening with the 8 mm-thick nail disc (sizes PH 12–28).

Ref. no.	Type	d_s [mm]	Thread size	e [mm]	l [mm]	L_{min} [mm]
020058	PH-DM-8	8	M 12	15	–	160
020059	PH-DM-10	10	M 14	17	–	192
020060	PH-DM-12	12	M 16	20	–	223
020061	PH-DM-14	14	M 18	22	–	255
020062	PH-DM-16	16	M 20	24	–	288
020063	PH-DM-20	20	M 24	32	–	353
020064	PH-DM-25	25	M 30	40	–	441
020065	PH-DM-28	28	M 36	42	–	510
020066	PH-DM-32	32	M 42	52	–	558
020067	PH-DM-40	40	M 52	70	–	700
020022	PH-AM-12	12	M 16	20	17	223
020023	PH-AM-14	14	M 18	22	20	255
020024	PH-AM-16	16	M 20	24	23	288
020025	PH-AM-20	20	M 24	32	30	353
020026	PH-AM-25	25	M 30	40	38	441
020027	PH-AM-28	28	M 36	42	40	510
020203	PH-MUR-12/10	12	M 14	≥ 17	–	223
020204	PH-MUR-14/12	14	M 16	≥ 20	–	255
020205	PH-MUR-16/14	16	M 18	≥ 22	–	288
020206	PH-MUR-20/16	20	M 20	≥ 24	–	353
020207	PH-MUR-25/20	25	M 24	≥ 32	–	441
020208	PH-MUR-28/25	28	M 30	≥ 40	–	510
020209	PH-MUR-32/28	32	M 36	≥ 42	–	558
020210	PH-MUR-40/32	40	M 42	≥ 52	–	700

Custom female bar variants

General building regulations approval DIBT

The PFEIFER female bars are intended for permanent reinforcement connections and continuations.

PFEIFER

Reinforcing

PH reinforcement connection

Individual installation situations can be realised with the customized versions.

Materials:

Stab: Reinforcing steel bar B500 B

Socket: Precision steel pipe E355

Plate: Flat steel S355

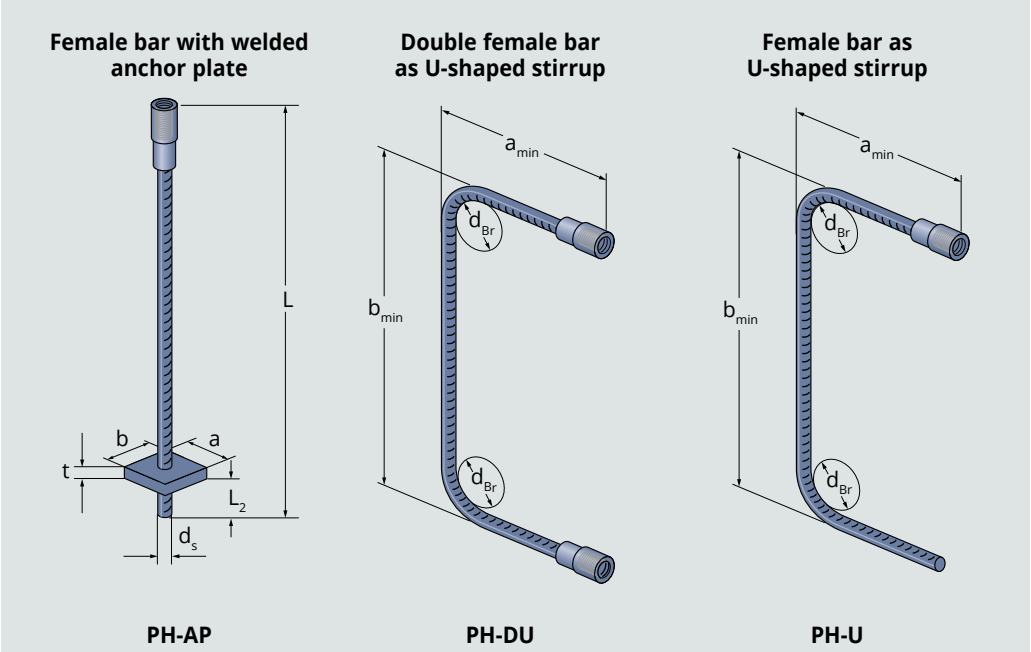

Noticee:

- All length specifications with a tolerance of ± 10 mm.
- Dimension L freely selectable according to customer specification.

Notice:

- With precisely fitting lengths, please take into account fastening with the 8 mm-thick nail disc. (Sizes PH 12–28)
- U-shaped stirrup with custom diameters on enquiry.
- Different bar diameters upon request.

With the female bar with welded anchor plate, note that proof of the anchorage in the concrete has to be provided by the responsible planner. Usable only for predominantly static loads. For dynamic stresses, see PFEIFER PH-EP end anchoring plate (page 15).

Ref. no.	Type	d_s [mm]	Thread size	Anchor plate a/b/t [mm]	L_2 [mm]	a_{min} [mm]	b_{min} [mm]
020080	**PH-AP-12**	12	M 16	50/50/10	12	–	–
020081	**PH-AP-14**	14	M 18	50/50/10	14	–	–
020082	**PH-AP-16**	16	M 20	70/70/12	16	–	–
020083	**PH-AP-20**	20	M 24	70/70/12	20	–	–
020084	**PH-AP-25**	25	M 30	90/90/20	25	–	–
020085	**PH-AP-28**	28	M 36	100/100/20	28	–	–
020086	**PH-AP-32**	32	M 42	110/110/20	32	–	–
020068	**PH-DU/PH-U-8**	8	M 12	–	–	110	280
020069	**PH-DU/PH-U-10**	10	M 14	–	–	135	280
020070	**PH-DU/PH-U-12**	12	M 16	–	–	140	280
020071	**PH-DU/PH-U-14**	14	M 18	–	–	140	280
020072	**PH-DU/PH-U-16**	16	M 20	–	–	150	280
020073	**PH-DU/PH-U-20**	20	M 24	–	–	300	620
020074	**PH-DU/PH-U-25**	25	M 30	–	–	300	630
020075	**PH-DU/PH-U-28**	28	M 36	–	–	310	640
020076	**PH-DU/PH-U-32**	32	M 42	–	–	340	650
020077	**PH-DU/PH-U-40**	40	M 52	–	–	440	680

Straight male bar

General building regulations approval DIBT

PFEIFER

Reinforcing

PH reinforcement connection

The PFEIFER male bars are intended for permanent reinforcement connections and continuations.

Material:
Reinforcing steel bar B500 B

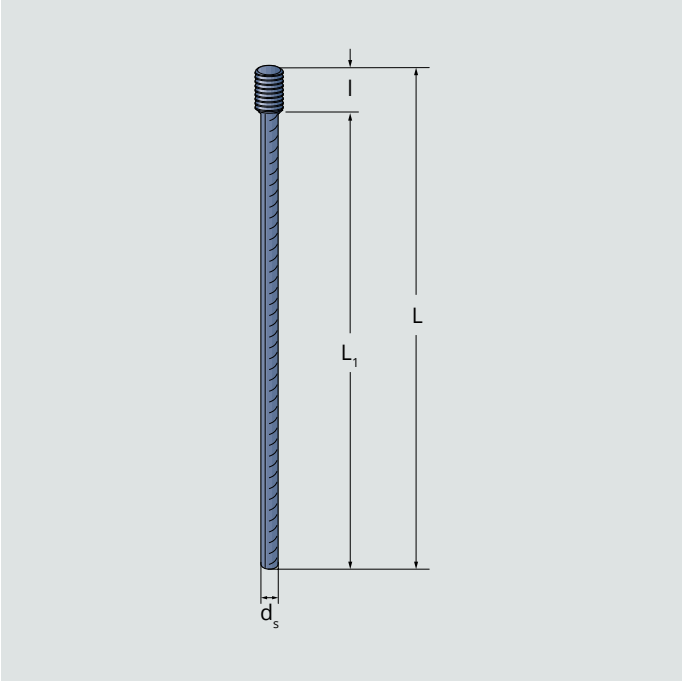

Notice:

All length specifications with a tolerance of ± 10 mm.

Ref. no.	Type	d_s [mm]	Thread size	L [mm]	L_1 [mm]	l [mm]	A_s [mm²]	N_{Rd} [kN]	Weight [kg/pce.]
235684/235685/235686	PH-A-12	12	M 16	570/800/1500	553/783/1483	17	0,51/0,71/1,33	49,2	0,51/0,71/1,33
236453/235454/236455	PH-A-14	14	M 18	660/930/1500	640/910/1480	20	0,80/1,12/1,81	66,9	0,80/1,12/1,81
236459/236461/236462	PH-A-16	16	M 20	1020/1440/2000	997/1417/1977	23	1,61/2,27/3,15	87,4	1,61/2,27/3,15
236465/236466/236467	PH-A-20	20	M 24	1280/1800/3000	1250/1770/2970	30	3,16/4,44/7,40	136,6	3,16/4,44/7,40
236469/236470/236471	PH-A-25	25	M 30	1600/2260/3600	1562/2222/3562	38	6,17/8,71/13,87	213,4	6,17/8,71/13,87
235688/235689/235690	PH-A-28	28	M 36	1790/2530/3600	1750/2490/3560	40	8,65/12,23/17,90	267,7	8,65/12,23/17,90
377759/419886	PH-A-32	32	M 42	2000/2900	1950/2850	50	12,94/18,62	349,6	12,94/18,62

Noticee:

- For the bar diameters 8, 10 and 40 mm as well as from a length of 3.6 mm, the PFEIFER PH-MU female bar in combination with the PFEIFER PH-K threaded connecting bolt is available as an alternative. A maximum length of up to 3.6 m is possible.
- Standard delivery without
- Delivery of the male bars including thread protection cap with corresponding colour coding.

Bent male bars

General building regulations approval DIBT

PFEIFER

Reinforcing

PH reinforcement connection

The PFEIFER male bars are intended for permanent reinforcement connections and continuations.
The standard-compliant force transmission from the vertical to the horizontal and vice versa can be realised with the bent variants of the PFEIFER male bars. For example with a reinforcement layout from the foundation into the column.

Material:
Reinforcing steel bar B500 B

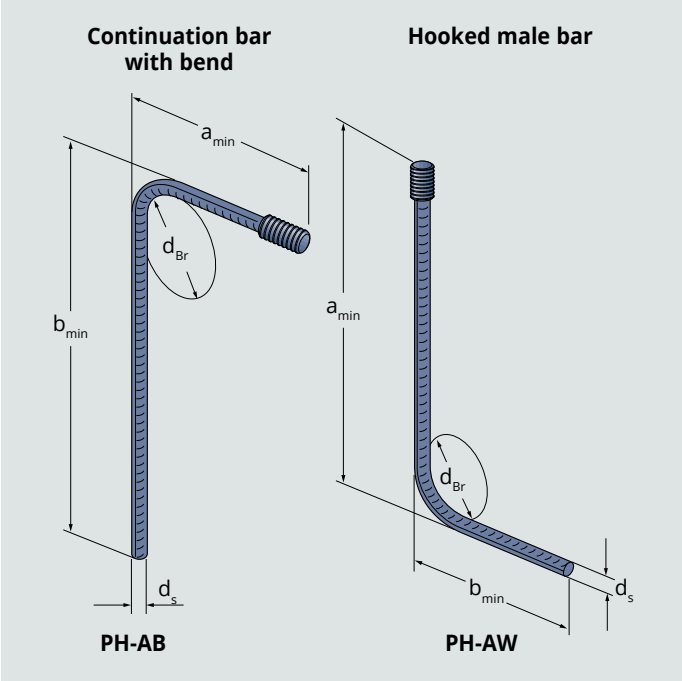

Notice:
All length specifications with a tolerance of ± 10 mm.

Bent male bars, bending roller diameter
$d_{Br} = 10\ \varnothing_s$
Deviations:
according to EN 1992-1-1

Hooked male bars, bending roller diameter
$d_{Br} = 4\ \varnothing_s$ at $\varnothing_s < 20$ mm
$d_{Br} = 7\ \varnothing_s$ at $\varnothing_s \geq 20$ mm
b_{min} according to EN 1992-1-1

stretched length L = a + b – x
PH-AB maximum 3,6 m
PH-AW maximum 3,6 m
b = L – a + x
a = L – b + x

Ref. no.	Type	d_s [mm]	Thread size	d_{Br} [mm]	a_{min}/b_{min} [mm]	Bending coefficient x [mm]
020010	PH-AB-12	12	M 16	120	164	38
020011	PH-AB-14	14	M 18	140	193	46
020012	PH-AB-16	16	M 20	160	223	55
020013	PH-AB-20	20	M 24	200	267	67
020014	PH-AB-25	25	M 30	250	324	82
020015	PH-AB-28	28	M 36	280	358	92
020016	PH-AW-12	12	M 16	48	97	25
020017	PH-AW-14	14	M 18	50	114	30
020018	PH-AW-16	16	M 20	64	126	32
020019	PH-AW-20	20	M 24	140	188	54
020020	PH-AW-25	25	M 30	175	232	66
020021	PH-AW-28	28	M 36	200	268	77

Notice:
the bent male bar can no longer be aligned with the bent end after screwing into the concreted-in female bar. If alignment is necessary, we recommend the use of a right-left bent coupler in combination with two female bars.

Female and male bars for welding

PFEIFER

Reinforcing

PH reinforcement connection

Female and male bars for welding are short lengths of 400 mm that ensure continuous reinforcement with the aid of subsequent welding of the continuation reinforcement.

Materials:

Bar: Reinforcing steel bar B500 B

Socket: Precision steel pipe E355

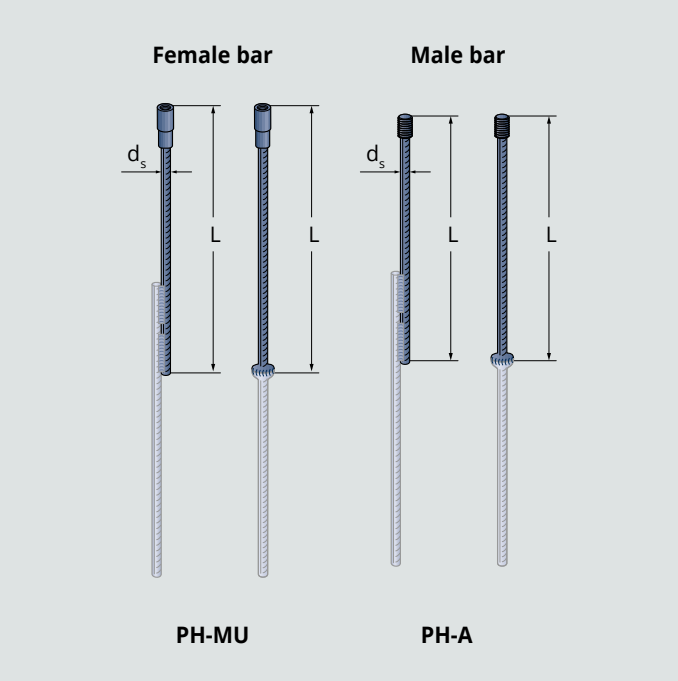

Notice:

All length specifications with a tolerance of ± 10 mm.

Ref. no.	Type	d_s	L	A_s	N_{Rd}	Weight
		[mm]	[mm]	[mm²]	[kN]	[kg/pce.]
119056	PH-MU-12	12	400	113	49,2	0,42
119061	PH-MU-14	14	400	154	66,9	0,58
119065	PH-MU-16	16	400	201	87,4	0,77
119071	PH-MU-20	20	400	314	136,6	1,25
119078	PH-MU-25	25	400	491	213,4	2,00
119084	PH-MU-28	28	400	616	267,7	2,69
235683	PH-A-12	12	400	113	49,2	0,35
236452	PH-A-14	14	400	154	66,9	0,48
236457	PH-A-16	16	400	201	87,4	0,63
236464	PH-A-20	20	400	314	136,6	0,99
236468	PH-A-25	25	400	491	213,4	1,54
235687	PH-A-28	28	400	616	267,7	1,93

Notice:

The scope of supply here is merely the short length of a female or male bar. The overlapping or butt joint for the continuation reinforcement must be executed by the user in accordance with the applicable technical rules.

Right-left threaded connecting bolt

General building regulations approval DIBT

PFEIFER

Reinforcing

PH reinforcement connection

The PFEIFER Right-Left Threaded Connecting Bolt allows the connection of bent bars if they are placed so close together that a free rotation of the bars is impossible. This coupling element facilitates the installation of non-rotatable bars on the basis of opposing threads.

Materials:

Bolt: Quenched and tempered steel 8.8
Nut: Steel according to EN ISO 4032

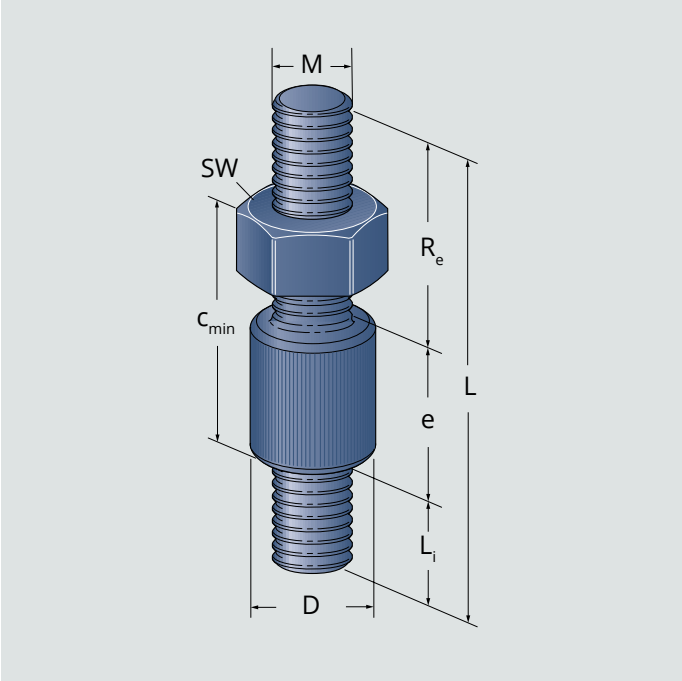

Ref. no.	Type	for d_s [mm]	Thread size	D [mm]	L [mm]	R_e [mm]	L_i [mm]	c_{min} [mm]	SW [mm]	Weight [kg/100 pcs.]
119269	PH-RL-8	8	M 12	16,5	61	24	12	37	19	8,00
135172	PH-RL-10	10	M 14	18,5	71	30	16	39	22	11,00
135173	PH-RL-12	12	M 16	20,5	79	35	19	41	24	14,00
119270	PH-RL-14	14	M 18	24,0	85	39	21	43	27	20,00
119271	PH-RL-16	16	M 20	27,0	90	42	23	44	30	27,00
119272	PH-RL-20	20	M 24	33,5	109	53	31	47	36	46,00
119273	PH-RL-25	25	M 30	42,0	131	67	39	53	46	85,00
119274	PH-RL-28	28	M 36	48,5	145	74	41	63	55	132,00
135174	PH-RL-32	32	M 42	50,5	170	90	50	70	65	235,00
150958	PH-RL-40	40	M 52	70,5	230	120	70	90	80	505,00

Coupling elements

General building regulations approval DIBT

Two male bars can be connected with the aid of the coupling socket, two female bars with the threaded connection bolt.

PFEIFER

Reinforcing

PH reinforcement connection

Two female bars combined with a threaded connection bolt can transmit seismic stresses resulting from earthquakes.

Materials:

Socket: Precision steel pipe E355
Bolt: Quenched and tempered steel 8.8

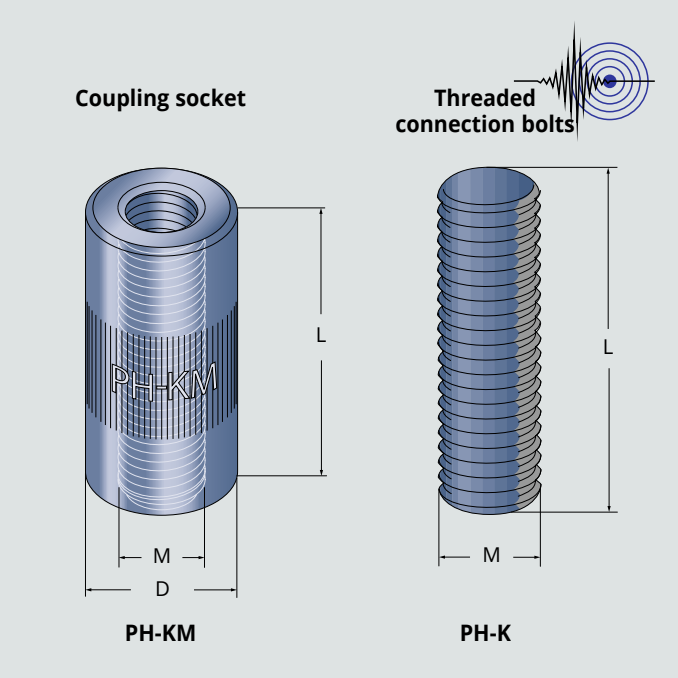

Notice:

Seismic stresses for connection combination:
PH-MU + PH-K + PH-MU

Ref. no.	Type	for d_s [mm]	Thread size	D [mm]	L [mm]	Weight [kg/100 pcs.]
363511	**PH-KM-12**	12	M 16	22,3	45	7,50
363512	**PH-KM-14**	14	M 18	25,5	52	11,50
363513	**PH-KM-16**	16	M 20	28,8	58	17,00
363514	**PH-KM-20**	20	M 24	35,3	73	30,00
363515	**PH-KM-25**	25	M 30	44,1	88	57,00
363516	**PH-KM-28**	28	M 36	51,0	90	78,00
363517	**PH-KM-32**	32	M 42	55,8	111	100,00
119263	**PH-K-8**	8	M 12	–	30	2,18
135169	**PH-K-10**	10	M 14	–	34	3,48
135170	**PH-K-12**	12	M 16	–	40	4,31
119264	**PH-K-14**	14	M 18	–	45	6,03
119265	**PH-K-16**	16	M 20	–	50	8,65
119266	**PH-K-20**	20	M 24	–	65	16,62
119267	**PH-K-25**	25	M 30	–	80	33,03
119268	**PH-K-28**	28	M 36	–	85	57,72
135171	**PH-K-32**	32	M 42	–	106	96,90
149216	**PH-K-40**	40	M 52	–	145	218,30

Reducing element

General building regulations approval DIBT

PFEIFER

Reinforcing

PH reinforcement connection

PH-RB reducing bolts are used for an economical reduction of reinforcement cross-sections according to static requirements. The reduction of diameters, which for example in the case of continuous columns often occurs in the upper floors where the load is lower, can hence be implemented without overlapping joints.

More economical reduction of reinforcement cross-sections according to static requirements can also be achieved using PH-RM reducing sockets. As with the reducing bolts, the reinforcement can be implemented in particular for small columns cross-sections very cheaply and in an assembly-friendly manner thanks to the space-saving implementation of the joint.

Materials:

Bolt: Quenched and tempered steel 8.8
Socket: Round steel S355

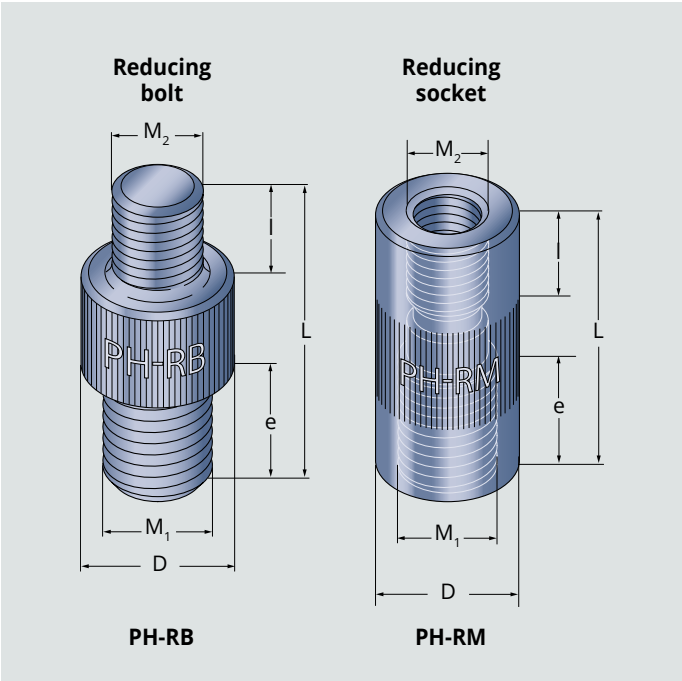

Ref. no.	Type	for d_s [mm]	M_1	M_2	e [mm]	l [mm]	L [mm]	D [mm]	Weight [kg/pce.]
211277	**PH-RB-12/10**	12 auf 10	M 16	M 14	19	16	60	20,5	0,11
211278	**PH-RB-14/12**	14 auf 12	M 18	M 16	21	19	65	24,0	0,15
211279	**PH-RB-16/14**	16 auf 14	M 20	M 18	23	21	69	27,0	0,19
211280	**PH-RB-20/16**	20 auf 16	M 24	M 20	31	23	79	33,5	0,31
211281	**PH-RB-25/20**	25 auf 20	M 30	M 24	39	31	95	42,0	0,55
211282	**PH-RB-28/25**	28 auf 25	M 36	M 30	41	39	110	48,5	0,90
211283	**PH-RB-32/28**	32 auf 28	M 42	M 36	50	41	121	50,5	1,21
211284	**PH-RB-40/32**	40 auf 32	M 52	M 42	70	50	160	70,5	2,70
211285	**PH-RB-16/12**	16 auf 12	M 20	M 16	23	19	67	27,0	0,19
211286	**PH-RB-28/20**	28 auf 20	M 36	M 24	41	31	102	48,5	0,81
211287	**PH-RB-32/25**	32 auf 25	M 42	M 30	50	39	119	50,5	1,11
211288	**PH-RM-12/10**	12 auf 10	M 16	M 14	20	17	50	22	0,09
211289	**PH-RM-14/12**	14 auf 12	M 18	M 16	22	20	55	25	0,12
211290	**PH-RM-16/14**	16 auf 14	M 20	M 18	24	22	60	30	0,21
211291	**PH-RM-20/16**	20 auf 16	M 24	M 20	32	24	75	35	0,36
211292	**PH-RM-25/20**	25 auf 20	M 30	M 24	40	32	90	45	0,75
211293	**PH-RM-28/25**	28 auf 25	M 36	M 30	42	40	105	50	0,98
211294	**PH-RM-32/28**	32 auf 28	M 42	M 36	52	42	115	55	1,16
211295	**PH-RM-16/12**	16 auf 12	M 20	M 16	24	20	60	30	0,22
211296	**PH-RM-28/20**	28 auf 20	M 36	M 24	42	32	95	50	0,95
211297	**PH-RM-32/25**	32 auf 25	M 42	M 30	52	40	115	55	1,26

Positioning Connector

General building regulations approval DIBT

PFEIFER

Reinforcing

PH reinforcement connection

The PH-PA positioning connector offers the user the option of connecting two non-freely rotatable PH reinforcement bars that are axially displaceable by a certain degree. The minimum and maximum installation distances A can be taken from the applicable approval.

Materials:

Socket:
Precision steel pipe E355

Bolt:
Quenched and tempered steel 8.8

Low nut:
Steel according to EN ISO 4035

High nut:
Steel according to EN ISO 4032

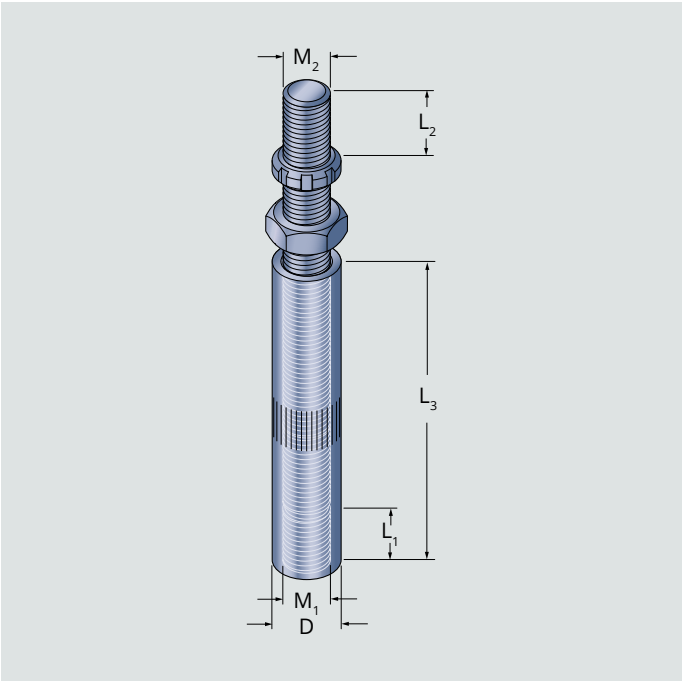

Ref. no.	Type	for d_s	M_1	M_2	D	L_1	L_2	L_3	l	Weight
		[mm]			[mm]	[mm]	[mm]	[mm]	[mm]	[kg/pce.]
211299	**PH-PA-12**	12	M 16	M 16	22,3	20	30	120	20	0,40
211300	**PH-PA-14**	14	M 18	M 18	25,5	22	32	128	22	0,60
211301	**PH-PA-16**	16	M 20	M 20	28,8	24	34	136	24	0,80
211302	**PH-PA-20**	20	M 24	M 24	35,3	32	42	188	32	1,50
211303	**PH-PA-25**	25	M 30	M 30	44,1	40	50	222	40	2,80
211304	**PH-PA-28**	28	M 36	M 36	51,0	42	52	230	42	3,94
211305	**PH-PA-32**	32	M 42	M 42	55,8	52	62	278	52	5,60
211306	**PH-PA-40**	40	M 20	M 20	70,0	70	80	350	70	10,90

Welding socket

General building regulations approval DIBT

PFEIFER

Reinforcing

PH reinforcement connection

Welding sockets are intended for areas in which steelwork and reinforced concrete parts are combined. By means of simply welding the PH-AH socket together, a connection between the steelwork and the concrete part can be made. The required welding seam thickness is to be defined by the responsible planner in accordance with the applicable technical rules.

Material:
Round steel S355

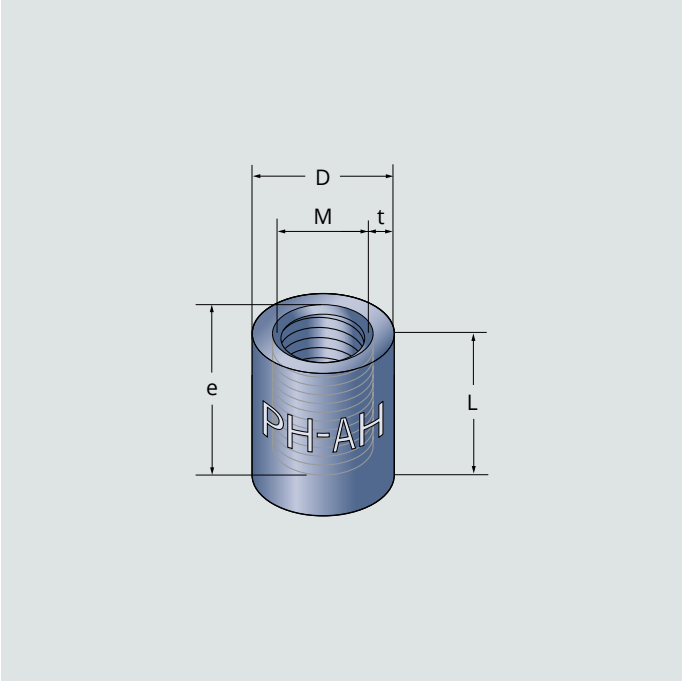

Ref. no.	Type	for d_s [mm]	Thread size	Usable thread length e [mm]	L [mm]	D [mm]	t [mm]	Weight [kg/pce.]
211307	**PH-AH-12**	12	M 16	≥ 20	35	25	5,50	0,09
211308	**PH-AH-14**	14	M 18	≥ 22	40	27	5,75	0,12
211309	**PH-AH-16**	16	M 20	≥ 24	40	30	6,25	0,14
211310	**PH-AH-20**	20	M 24	≥ 32	50	40	9,50	0,35
211311	**PH-AH-25**	25	M 30	≥ 40	60	50	11,75	0,65
211312	**PH-AH-28**	28	M 36	≥ 42	65	55	11,50	0,78
211313	**PH-AH-32**	32	M 42	≥ 52	75	60	11,25	0,98
211314	**PH-AH-40**	40	M 52	≥ 70	90	75	14,00	1,81

End anchoring plate

General building regulations approval DIBT

The PFEIFER PH-EP end anchoring plate also enables dynamic loads to be dissipated according to EN 1992-1-1.

PFEIFER

Reinforcing

PH reinforcement connection

The end anchoring plate is simply screwed onto the PFEIFER PH male bar with the torque specified in the approval and is then ready to be used immediately.

Material:
Round steel S355

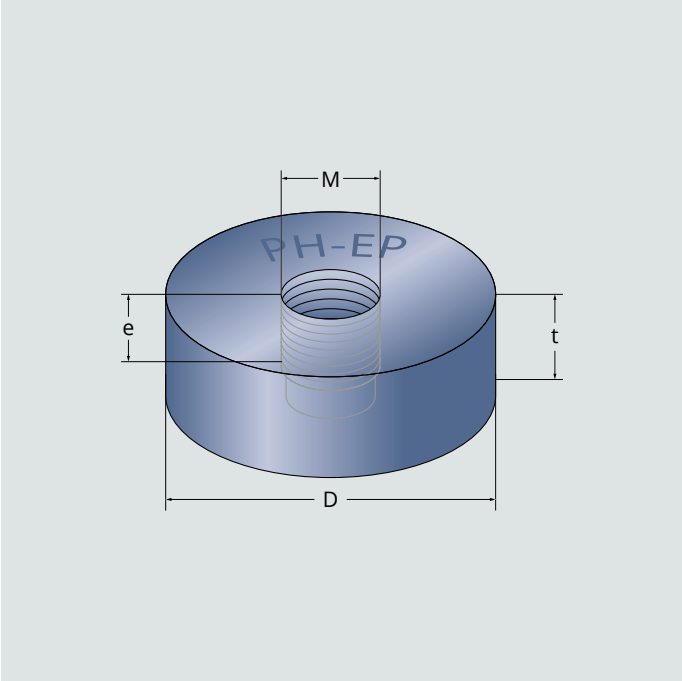

Ref. no.	Type	for d_s	Thread size	e	D	t	Weight
		[mm]		[mm]	[mm]	[mm]	[kg/100 pcs.]
218365	**PH-EP-12**	12	M 16	16	45	19	20,50
218366	**PH-EP-14**	14	M 18	18	55	21	35,20
218367	**PH-EP-16**	16	M 20	20	60	23	45,50
218368	**PH-EP-20**	20	M 24	24	75	27	85,60
218369	**PH-EP-25**	25	M 30	30	95	33	167,80
218370	**PH-EP-28**	28	M 36	36	105	39	266,00

PH nail disc

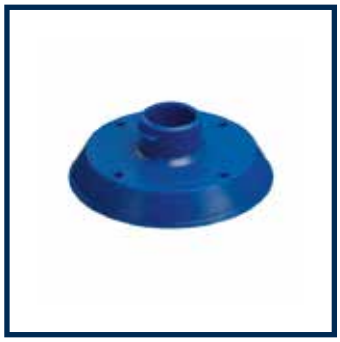

PFEIFER

Reinforcing

PH reinforcement connection

The female bars are delivered complete with nail discs to aid assembly and a protection cap to protect the internal thread. The female bars can be nailed precisely to the formwork through the nail holes in the nail disc.

The colour coding is of particular importance. This ensures that sizes can be identified easily on the building site, because the male bars are also fitted with corresponding colour-coded thread protection caps.

Material:
Plastic

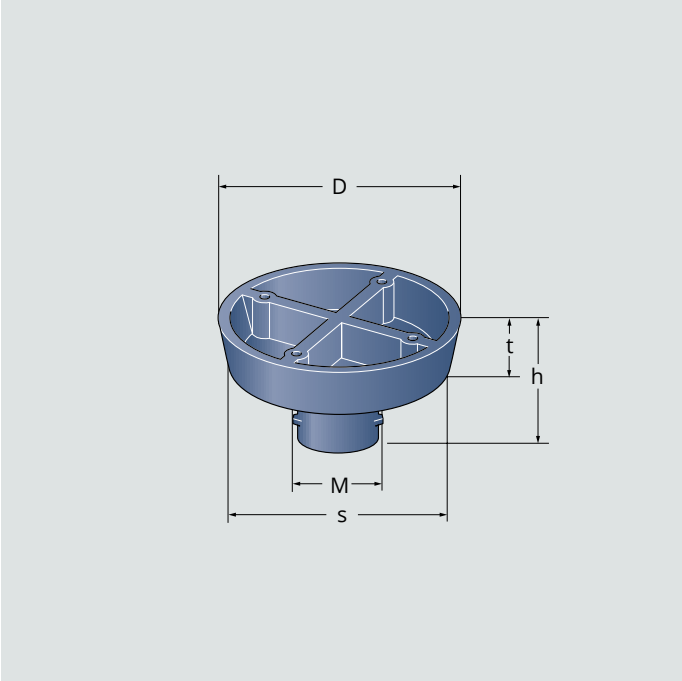

Nail discs are supplied with every female bar as standard. Additional quantities of PFEIFER nailing plates can be ordered in all sizes and amounts using the below ref. no.

PFEIFER discs can be used for fastening the sizes PH-MU-10, 32 and 40 to the formwork.
- **For PH-MU-10 (M 14): 391 648**
- **For PH-MU-32 (M 42): 391 655**
- **For PH-MU-40 (M 52): 391 656**

Ref. no.	Type	for d_s [mm]	for Thread size	Colour coding	D [mm]	s [mm]	h [mm]	t [mm]	Weight [kg/100 pcs.]
118515	**PH-ST-8**	8	M 12	**black**	55	45	18	8	0,77
118516	**PH-ST-12**	12	M 16	**yellow**	55	45	18	8	0,79
118517	**PH-ST-14**	14	M 18	**blue**	55	45	18	8	0,81
118518	**PH-ST-16**	16	M 20	**white**	55	45	20	8	0,83
118519	**PH-ST-20**	20	M 24	**grey**	80	70	20	8	1,29
118520	**PH-ST-25**	25	M 30	**red**	80	70	23	8	1,35
118521	**PH-ST-28**	28	M 36	**black**	80	70	25	8	1,44

Torque wrench

Ref. no. 219272

PFEIFER

Reinforcing

PH reinforcement connection

We supply the PFEIFER torque wrench for final tightening of the male bars to the correct torque moment. It has adjustable, self-locking, toothed jaws that grip the reinforcing bars securely. As a result, the reinforcing steel is securely gripped. The torque range can be adjusted to suit all reinforcing bar sizes (torque wrench range from 40 to 200Nm).

Material:

Tool steel/plastic

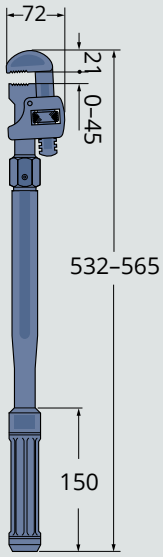

Notice:

It is not absolutely necessary to use the PFEIFER torque wrench for the assembly. Suitable tools with adjustable torque are also allowed.

Assembly torques – torque wrench

For Type	M_T [Nm]
PH-8	20
PH-10	25
PH-12	30
PH-14	40
PH-16	60
PH-20	80
PH-25	100
PH-28	140
PH-32	180
PH-40	200

DEUTSCHLAND

87700 Memmingen
+49 (0) 83 31937345
bautechnik@pfeifer.de

ÖSTERREICH

+49 (0) 160 2875039
austria-bt@pfeifer.de

SCHWEIZ

8934 Knonau
+41 (0) 447 68 5555
info@pfeifer-isofer.ch

www.pfeifer.info/bautechnik

06.20 | 442363 | Bilder: © adobestock